Changes to UCR 2008, Change 2, made by UCR 2008, Change 3, Section 5.3.3, Network Infrastructure E2E Performance Requirements

SECTION	CORRECTION	EFFECTIVE DATE
5.3.3.3, Table 5.3.3-2 and Table 5.3.3-3	Corrected legend for 'I' from INTERMEDIATE precedence to IMMEDIATE precedence.	Immediate
5.3.3.3.3	Changed from Eight-Queue Model to Six-Queue Model and expanded the requirements.	18 Months
5.3.3.3.4	Initial paragraph rewritten for clarity.	Immediate
5.3.3.3.4 Paragraph 2	VLAN Tags removed as requirement for layer 3 traffic engineering.	Immediate
5.3.3.12.4.2	Added the following clarification: **Note Added:** Unlike IPv4, fragmentation in IPv6 is performed only by source nodes, not by routers along a packet's delivery path.	Immediate
5.3.3.13	Bandwidth Provisioning Assumptions: Samples/Packet corrected from 80 Samples to 160 samples per packet	Immediate
5.3.3.14	Renamed Section "IP Routing Protocols" from "Interchangeability"	Immediate
5.3.3.14	Added MPLS requirements for CE Routers	18 Months
5.3.3.14	Added Graceful Restart Conditional Requirements for IP Routing Protocols that support it.	18 Months
5.3.3.18	Deleted duplicate requirement #18 same as #9: 9. [Required: PMT] The network probe shall support a minimum of two 10/100/1000-Mbps Ethernet Network Interface Cards (NICs) one for Operations, Administration, and Maintenance (OA&M) and the other for test traffic. 18.[Required: PMT] The product data server shall support a minimum of two 10/100-Mbps Ethernet NICs.	Immediate
Table 5.3.3-3	Updated errors found in queue allocation for the Six Queue Model	Immediate

THIS PAGE INTENTIONALLY LEFT BLANK

TABLE OF CONTENTS

SECTION **PAGE**

LIST OF FIGURES

FIGURE **PAGE**

LIST OF TABLES

TABLE **PAGE**

THIS PAGE INTENTIONALLY LEFT BLANK

5.3.3 Network Infrastructure End-to-End Performance Requirements

Section 5.3.3 contains E2E performance requirements for the network infrastructure that supports the IP-based VVoIP. The focus of this section is on the network performance aspects. The requirements for the various APL-approved products that make up the network infrastructure are provided in the respective sections of this document as follows:

1. The requirements for LAN products (i.e., LAN Core, Distribution, and Access switches) including LAN design guidance are provided in Section 5.3.1, Assured Services Local Area Network Infrastructure.

2. The requirements for the Network Infrastructure products (i.e., DISN Router, DISN Switch, and DISN Access Elements) are provided in Section 5.5, Network Infrastructure Product Requirements.

This section is written for converged networks, but does not address the effect of ranked voice on data and video services, which will be addressed in a subsequent revision of this document. The network infrastructure E2E performance requirements in this version are focused on voice applications. Later versions of this section will address video and data E2E performance requirements. Finally, this section addresses wired WANs, but does not address wireless WANs.

5.3.3.1 End-to-End Network Infrastructure Description

The E2E network infrastructure consists of three network segments. The network segments are the Customer Edge (CE), Network Edge, and Core Segments. Figure 5.3.3-1, UC E2E VVoIP Network Infrastructure Segments and Measurement Reference Points, illustrates a high-level overview of the three-segment network infrastructure. The CE Segment is connected to the Core Segment by the Network Edge Segment. The description of each segment is provided in the following paragraphs.

5.3.3.1.1 CE Segment

The CE Segment may consist of a LAN, a CAN, or a MAN. The boundary device of the CE Segment is the CE Router. The Network Edge Segment connects the CE Router to the Aggregation Router (AR) via a DISN Service Delivery Node (SDN). The CE Router is owned and maintained by the B/P/C/S, unless the CE is used to delineate a standalone DISN SDN. The CE Segment is considered robust and the LAN/CAN/MAN characteristics include high bandwidth, diversity, and redundancy. The size of the LAN/CAN/MAN is dependent on its ability to meet the performance requirements defined in the UCR and the solution is internal to a DAA-approved Information Assurance boundary. Design guidance and requirements for the LAN portion of the CE Segment are provided in Section 5.3.1, Assured Services Local Area Network Infrastructure.

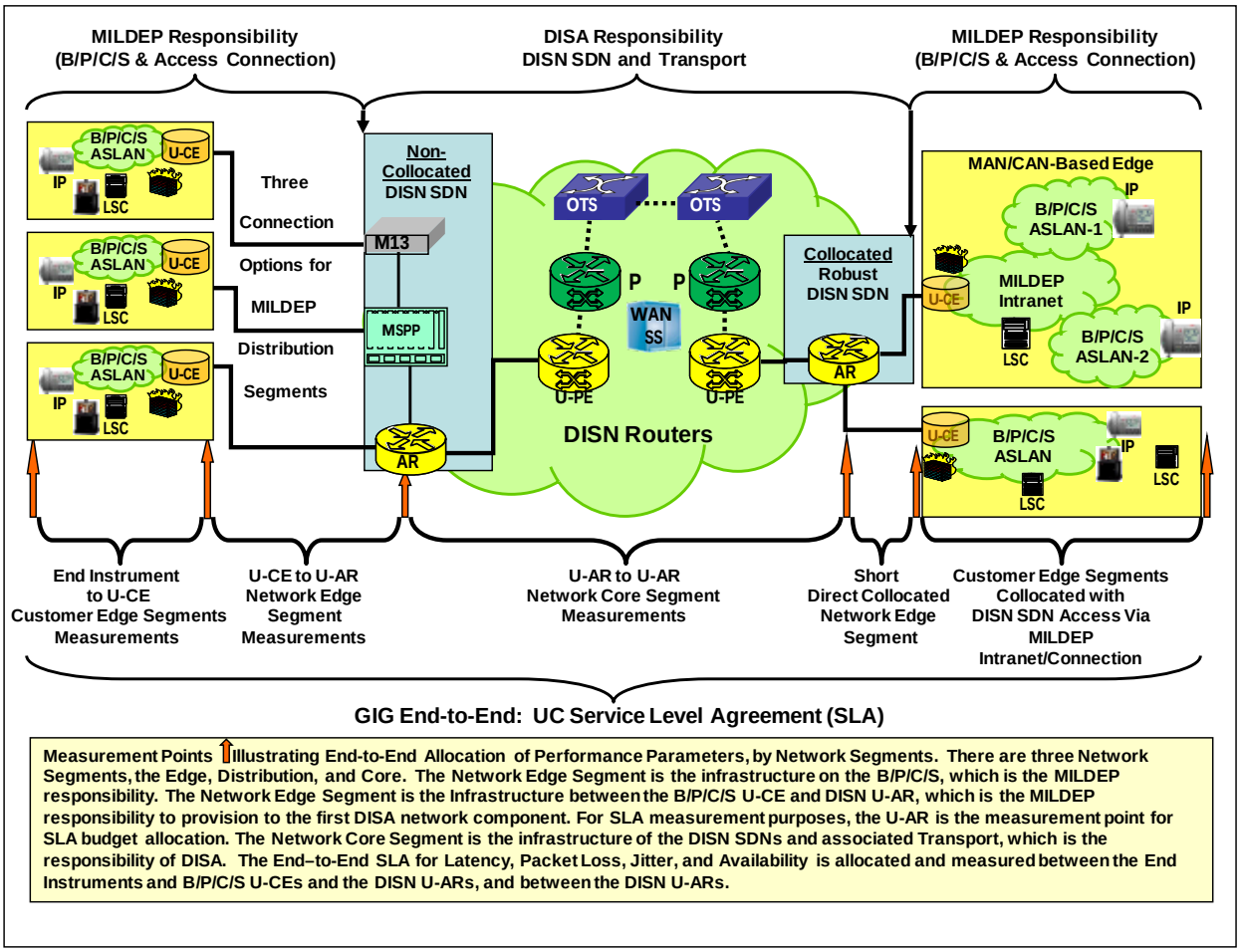

Figure 5.3.3-1. UC E2E VVoIP Network Infrastructure Segments and Measurement Reference Points

5.3.3.1.2 Network Edge Segment

The Network Edge Segment is measured from the WAN facing side of the CE Router to the MILDEP facing side of the AR. Depending on the specific class of DISN SDN (defined in Section 5.3.3.1.3), the Network Edge Segment may consist of several configurations. The simplest configuration, which has an extremely low packet delay, is encountered when the CE Router and AR are collocated. In this case, the Network Edge Segment is a direct, short Ethernet (i.e., 100Base-T or 1000Base-T) connection between the CE Router and an AR. Figure 5.3.3-2, High-Level Illustration of E2E Network Segments, illustrates short-delay and longer-delay Network Edge Segment configurations.

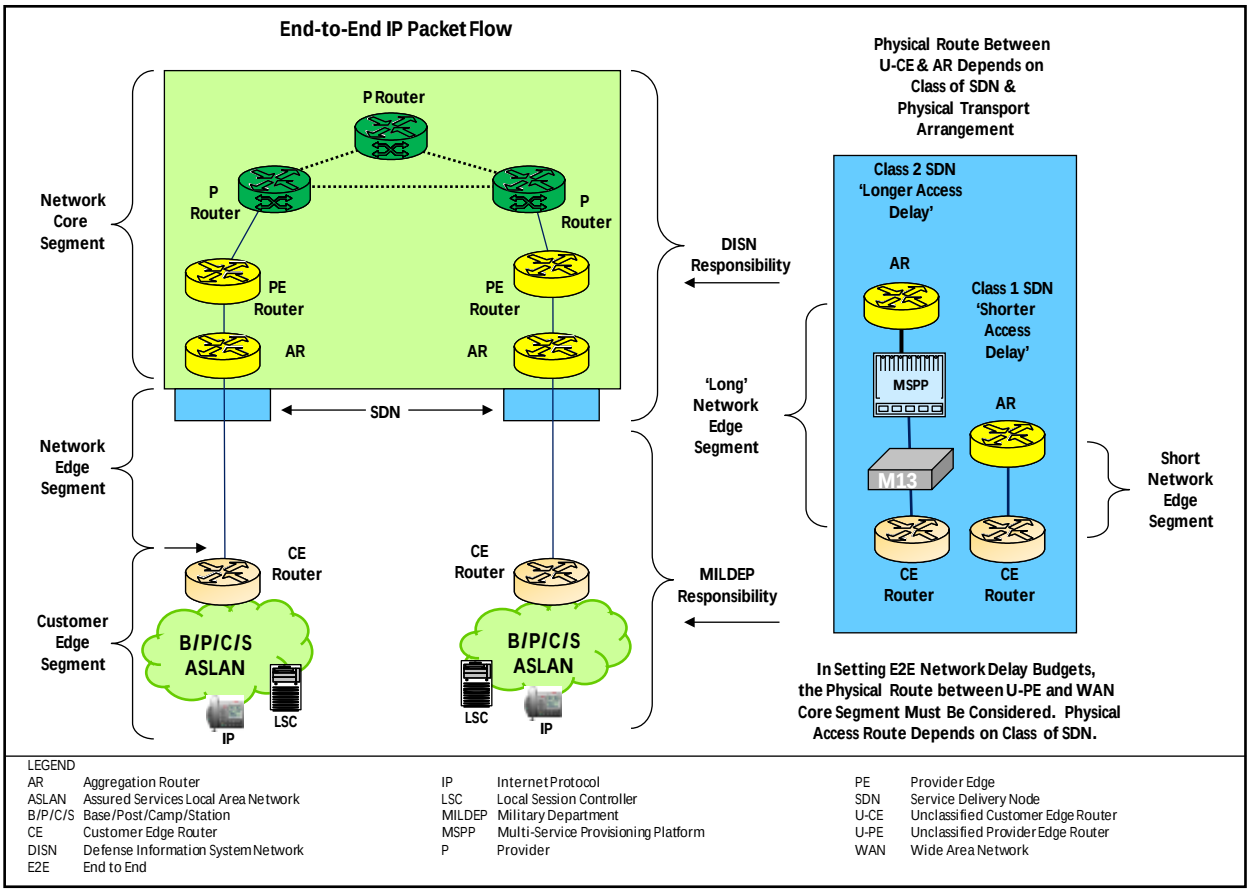

Figure 5.3.3-2. High-Level Illustration of E2E Network Segments

5.3.3.1.3 DISN Service Delivery Nodes

A DISN SDN is the start of the DISA's layer of responsibility and it serves as the entry point for egress traffic exiting the CE Segment. From a physical perspective, the SDN is a computer room that houses all network equipment interfacing with the DISN. This location is most of the time found within the B/P/C/S. There are several classes of SDNs depending on whether the SDN has a:

- M13, an APL product performing multiplexing and de-multiplexing functions of T1 and T3 carriers
- Multi-Service Provisioning Platform (MSPP), a network device that may provide multiple network functions such as Routing, Switching, IDS, or Firewall.
- Provider (P) router

- Provider Edge (PE) router, and/or
- Aggregation (AR) router.

In general, the CE Router connects either directly to the AR or through a series of equipment and connections to arrive at the AR. This leads to two classes of SDNs:

1. Class 1 SDN: Is the type of SDN that has a short network segment, often categorized by the CE Router being collocated with the AR and has a shorter access and serialization delay.

2. Class 2 SDN: Is the type of SDN that has a longer network segment, often categorized by the CE Router not being collocated with the AR, has intervening network devices and connections, and has a longer access and serialization delay.

The CE Router connects to the SDN via the Network Edge Segment using one of two connection options as shown in Figure 5.3.3-2, High-Level Illustration of E2E Network Segments and described above. The CE Router DISA is responsible for the DISN SDN-to-SDN performance.

5.3.3.1.4 Network Core Segment

The Network Core Segment provides IP-based transport services over a high-speed network infrastructure and consists of the SDNs and the DISN Transport elements between SDNs. The DISN Transport between SDNs typically consists of high-speed optical circuits that start and end at the PE router. The PE routers are connected by a series of Provider (P) routers to form a reliable and robust IP core network. Typically, the ARs are subtended off the PE Router via a high-speed Ethernet connection. Figure 5.3.3-1, UC E2E VVoIP Network Infrastructure Segments and Measurement Reference Points, shows the different network segments.

The network infrastructure is categorized according to its design state for performance measurement and analysis. Therefore, DISN networks are organized based on the infrastructure being a Deployed environment or a Fixed environment. Since the performance of the network infrastructure is affected by the type of deployment, the network infrastructure is categorized as:

- (F-F) Fixed-to-Fixed: Deployments associated by terrestrial transport (wire line) connections serviced by the DISN
- (F-D) Fixed-to-Deployable : Deployments associated with a Fixed point of presence and a Deployable entry point as described below
- (D-D)Deployable-to-Deployable: Deployments associated with E2E military, on the field warfighter networks such as Standardized Tactical Entry Point

(STEP)/Teleport, Joint Network Node (JNN) Regional Hub, the Naval Computer and Telecommunications Area Master Station (NCTAMS), or some other Teleport. D-D connections may or may not transit a Fixed point of presence.

This section covers only the (F-F) Fixed-to-Fixed requirements unless specifically noted otherwise.

5.3.3.1.5 Expanded CE Segment: Communities of Interest Networks

Figure 5.3.3-1, UC E2E VVoIP Network Infrastructure Segments and Measurement Reference Points, addresses the use of MANs or CANs to create Community of Interest Networks (COINs) or MILDEP Intranets. It must be noted that the entire LAN, MAN, or CAN falls under the CE Segment for E2E network infrastructure performance requirements.

5.3.3.2 VVoIP Characteristics

Technologies that support Voice and Video over IP networks (VVoIP) require a high level of traffic engineering planning or it can adversely affect the audio and visual quality experienced by the end-user. Developing VVoIP friendly networks requires a sound understanding of the VVoIP traffic characteristics. VVoIP packet flows do not respond to network congestions by readjusting network sending rates in response to network bottlenecks. Therefore, Voice and Video flows are inelastic in nature.

This section addresses the inelastic real-time aggregate service class category composed of applications sensitive to low latency (IP Packet Transfer Delay (IPTD)), jitter (IP Packet Delay Variation (IPDV)), and packet loss (IP Packet Loss Ratio (IPLR)). As mentioned, traffic sources in this aggregate service class category do not have the ability to reduce their transmission rates based on congestion feedback received from the network. Typically, applications in this service class are configured to negotiate the setup of a Real Time Protocol (RTP)/UDP session using a signaling protocol (e.g., AS-SIP, H.323, H.248). When a user or end point has been authorized to start a new session, the admission control procedure verifies that the newly admitted data rates are within the engineered capacity. The following granular service applications are categorized as Inelastic/Real Time Services:

- Assured Voice User Signaling and Bearer
- Non-Assured Voice User Signaling and Bearer
- Circuit Emulation
- Short Messages
- Assured Interactive VTC (i.e., DVS)
- Non-Assured Interactive VTC
- Command and Sensor Messages
- Broadcast Video

5.3.3.3 General Network Requirements

The primary performance driver for voice products in the DISN is the E2E voice quality. Voice quality is calculated E2E from handset to handset. For voice applications, the measurement model for the EI is the E-Model as described in the Telecommunications Industry Association (TIA)/TSB-116-A, which is based on the International Telecommunications Union – Telecommunication Standardization Sector (ITU-T) Recommendation G.107. The E-Model uses an R-Factor rating which correlates to the Mean Opinion Score (MOS) rating specified by ITU-T recommendation P.800. The detailed EI voice quality calculation requirements are found in Section 5.3.2.19.2.1, Call Data.

This section specifies network infrastructure related performance requirements and takes into account all elements of the network to ensure handset-to-handset requirements are achievable. The following assumptions were made in determining performance requirements necessary to achieve acceptable service:

- IPv4
- Wireline Fixed Network (A=0)
- G.711 codec with 20 ms samples (Ie=0)
- Bearer packet size = 242 bytes
  - Calculated for SRTP-encrypted bearer packets
  - Includes SRTP Tag and Ethernet Interframe Gap
- Weighted Terminal Coupling Loss (TCLw) = 52 dB (IAW ANSI/TIA-810-B)
- Latency due to EI (voice to IP and IP to voice) is 50 ms
  - Latency due to de-jitter buffer in an EI is 20 ms
  - Includes Packet Loss Concealment delays

5.3.3.3.1 Voice Codec Compression

[Conditional] If the product supporting VVoIP uses compression, the compression approach shall be reversible.

NOTE: The preferred codec used for E2E F-F voice sessions is the G.711 Pulse-Code Modulation (PCM) (Uncompressed) with 20 ms samples. Other codecs are allowed and a

minimum list of codecs that must be supported by all EIs is found in Section 5.3.2, Assured Services Requirements.

5.3.3.3.2 Differentiated Services Code Point

[Required] The product shall support the Differentiated Services Code Point (DSCP) plan, as shown in Table 5.3.3-1, DSCP Assignments. DiffServ assignments shall be software configurable for the full range of six bit values (0-63 Base10) for backwards compatibility with IP precedence environments that may be configured to use the TOS field in the IP header but do not support DSCP.

Table 5.3.3-1. DSCP Assignments

AGGREGATED SERVICE CLASS	GRANULAR SERVICE CLASS	PRIORITY/ PRECEDENCE	DSCP BASE10	DSCP BINARY	DSCP BASE8
Network Control	Network Signaling (OSPF, BGP, etc.)	N/A	48	110 000	60
Inelastic Real-Time	User Signaling (AS-SIP, H.323, etc.)	N/A	40	101 000	50
	Short Message	FO	32	100 000	40
	Assured Voice (Includes SRTCP)	FO	41	101 001	51
		F	43	101 011	53
		I	45	101 101	55
		P	47	101 111	57
		R	49	110 001	61
	Non-Assured Voice*	N/A	46	101 110	56
	Assured Multimedia Conferencing (voice, video, and data)	FO	33	100 001	41
		F	35	100 011	43
		I	37	100 101	45
		P	39	100 111	47
	(code points 34, 36, and 38 are for Non-Assured Multimedia Conferencing)	R	51 [34,36,38]**	110 011	63
	Broadcast Video	N/A	24	011 000	30
Preferred Elastic	Multimedia Streaming	FO	25	011 001	31
		F	27	011 011	33
		I	29	011 101	35
		P	31	011 111	37
		R	26 [28,30]**	011 010	32
	Low-Latency Data: (IM, Chat, Presence)	FO	17	010 001	21
		F	19	010 011	23
		I	21	010 101	25
		P	23	010 111	27
		R	18 [20,22]**	010 010	22
	High Throughput Data	FO	9	001 001	11
		F	11	001 011	13
		I	13	001 101	15

AGGREGATED SERVICE CLASS	GRANULAR SERVICE CLASS	PRIORITY/ PRECEDENCE	DSCP BASE10	DSCP BINARY	DSCP BASE8
		P	15	001 111	17
		R	10 [12,14]**	001 010	12
	OA&M	N/A	16	010 000	20
Elastic	Best Effort	N/A	0	000 000	00
	Low Priority Data	N/A	8	001 000	10

LEGEND:
AS-SIP Assured Services Session Initiation Protocol
BGP Border Gateway Protocol
DSCP Differentiated Services Code Point
F FLASH
FO FLASH OVERRIDE
I INTERMEDIATE
IM Instant Messaging
N/A Not Applicable
OA&M Operations, Administration, and Maintenance
OSPF Open Shortest Path First
P PRIORITY
R ROUTINE
SRTCP Secure Real-Time Transport Control Protocol
* For a definition see Appendix A, Section A2, Glossary and Terminology Description.
** Code points in brackets are reserved for nonconformance marking.

5.3.3.3.3 VVoIP Assured Forwarding Per-Hop Behavior Requirements

Assured forwarding allows for some level of delivery guarantee as long as the traffic does not exceed a predetermined subscription rate. Traffic that exceeds the subscription rate faces a higher probability of being dropped if congestion occurs. Assured Forwarding Per-Hop Behavior (PHB) is defined in RFCs 2597 and RFC 3260.

1. **[Required]** The system routers supporting VVoIP shall support and configure the four-queue PHBs, as defined in Table 5.3.3-2, Four-Queue PHB Approach.

2. **[Required]** The system routers supporting VVoIP shall support and configure the six-queue PHBs as defined in Table 5.3.3-3, Six-Queue PHB Approach.

3. **[Required]** CE Router PHB bandwidth allocation and negotiation needs to occur between the AR and the CE Router to prevent asymmetrical performance.

4. **[Required]** The CE Router bandwidth budget must be less than or equal to the AR bandwidth budget per queue.

NOTE 1: For example, if an LSC session budget is 10 voice sessions, then the CE Router bandwidth budget for the EF queue must be greater than 1,100 kbps (10 * 110 kbps). If the CE Router bandwidth budget was say, 1400 kbps, to account for expected growth, surge, or other unplanned EF traffic; then the AR bandwidth must be greater than 1400 kbps or greater than the CE Router bandwidth budget. The LSC session budget must be less than the equivalent CE Router bandwidth budget, in the scenario above, less than 1400 kbps.

NOTE 2: For Assured Forwarding (AF) and Expedited Forwarding (EF) PHBs, refer to Section 5.3.2.14.3, Per Hop Behavior Support.

5. **[Required]** Use of the Six-Queue model is required for routers that support it.

6. **[Required]** The same queuing model (six or four) shall be configured at both ends of the communication path to prevent asymmetrical performance.

7. **[Required]** If the router supports it, the six-queue model shall be configured on interfaces above T1.

8. **[Required]** The four-queue model shall be configured on interfaces T1 and below or on routers that do not support the six-queue model.

Table 5.3.3-2. Four-Queue PHB Approach

QUEUE	GRANULAR SERVICE CLASS	PRIORITY/ PRECEDENCE	DSCP BASE10	PHB
3	Network Signaling (See Note)	N/A	48	EF
	User Signaling	N/A	40	
	Short Message	FO	32	
	Assured Voice	FO	41	
		F	43	
		I	45	
		P	47	
		R	49	
2	Assured Multimedia Conferencing (Assured Video Conferencing)	FO	33	AF41
		F	35	
		I	37	
		P	39	
		R	51	
1	Broadcast Video	N/A	24	AF31
	Non-Assured Voice*	N/A	46	
	Multimedia Streaming (Video Streaming)	FO	25	
		F	27	
		I	29	
		P	31	
		R	26	
	Non-Assured Multimedia Conferencing (Non-Assured Video Conferencing)	FO	28	
		F	30	
		I	34	
		P	36	
		R	38	
	Low-Latency Data (IM, Chat, Presence)	FO	17	
		F	19	
		I	21	
		P	23	
		R	18 [20,22]**	

QUEUE	GRANULAR SERVICE CLASS	PRIORITY/ PRECEDENCE	DSCP BASE10	PHB
	High Throughput Data	FO	9	AF32
		F	11	
		I	13	
		P	15	
		R	10 [12,14]**	
	OA&M	N/A	16	
0	Best Effort	N/A	0	Default
	Low Priority	N/A	8	

NOTE: Many routers have a separate non-configurable queue for network control traffic. If a router does not have the network control queue, the network control traffic would be processed in the EF queue.

LEGEND:

AF	Assured Forwarding	I	IMMEDIATE	OSPF	Open Shortest Path First
DSCP	Differentiated Services Code Point	IM	Instant Messaging	P	PRIORITY
EF	Expedited Forwarding	IS-IS	Intermediate System-Intermediate	PHB	Per Hop Behavior
F	FLASH	N/A	Not Applicable	R	ROUTINE
FO	FLASH OVERRIDE	OA&M	Operations, Administration, and Maintenance		

*For a definition see Appendix A, Section A2, Glossary and Terminology Description.
** Code points in brackets are reserved for nonconformance marking.

Table 5.3.3-3. Six-Queue PHB Approach

QUEUE	GRANULAR SERVICE CLASS	PRIORITY/ PRECEDENCE	DSCP BASE10	CER PHB
5	Network Signaling (See note)	N/A	48	EF
4	User Signaling	N/A	40	
	Short Message	FO	32	
	Assured Voice	FO	41	
		F	43	
		I	45	
		P	47	
		R	49	
	Assured Multimedia Conferencing (Assured Video Conferencing)	FO	33	
		F	35	
		I	37	
		P	39	
		R	51	
3	Broadcast Video	N/A	24	
	Non-Assured Voice*	N/A	46	
	Non-Assured Multimedia Conferencing (Non-Assured Video Conferencing)	FO	28	
		F	30	
		I	34	
		P	36	
		R	38	
	Multimedia Streaming (Video Streaming)	FO	25	
		F	27	
		I	29	
		P	31	
		R	26	

QUEUE	GRANULAR SERVICE CLASS	PRIORITY/ PRECEDENCE	DSCP BASE10	CER PHB
2	Low-Latency Data (IM, Chat, Presence)	FO	17	AF
		F	19	
		I	21	
		P	23	
		R	18 [20,22]**	
	High Throughput Data	FO	9	
		F	11	
		I	13	
		P	15	
		R	10 [12,14]**	
	OA&M	N/A	16	
~~1~~	~~OA&M~~	~~N/A~~	~~16~~	~~BE~~
~~0~~1	Best Effort (Default)	N/A	All Remaining~~0~~	~~Defau~~ ~~lt~~BE
0	Low Priority	N/A	8	

NOTE: Many routers have a separate non-configurable queue for network control traffic. If a router does not have the network control queue, the network control traffic would be processed in the EF queue.

LEGEND:

AF	Assured Forwarding	FO	FLASH OVERRIDE	R	ROUTINE
CER	Customer Edge Router	I	IMMEDIATE	N/A	Not Applicable
DSCP	Differentiated Services Code Point	IM	Instant Messaging	OA&M	Operations, Administration, and Maintenance
EF	Expedited Forwarding	P	PRIORITY		
F	FLASH	PHB	Per Hop Behavior		

* For a definition see Appendix A, Section A2, Glossary and Terminology Description
** Code points in brackets are reserved for nonconformance marking.

5.3.3.3.4 Traffic Conditioning Requirements

Traffic conditioning and engineering seeks to avoid congestion on IP-based networks. One way to avoid congestion is through the assignment of packets into their own Committed Information Rate (CIR) subgroups part of a larger CIR group. The partitioned subgroups are called “packet queues”, while the action “queuing”, is closely related to the “scheduling” of packets into each subgroup and it is called packet queuing. Each queue is given its own preferential treatment for traffic remarking, policing and scheduling.

The overall strategy is called Quality of Service (QoS). The need for QoS stems from network traffic consisting of data sent by different kinds of applications. These various applications have different network bandwidth needs and use different transmission protocols to send their data. When these different types of data converge, and are sent on a shared link, one transmission can overwhelm another, resulting in a negative effect.

However, since traditional queuing and scheduling algorithms manage the front end of a packet buffer line; as congestion increases, so does the need to manage the tail end of the buffer. If no congestion avoidance algorithm is configured, the link is said to tail drop. In other words, as queue buffers begin to fill, all packets are dropped on arrival. This has a negative effect on mission-driven real time traffic.

In this section, traffic conditioning relates to the tail end aspects of buffer queuing.

NOTE: The definition of traffic engineering is found in Appendix A, Section A2, Glossary and Terminology Description.

1. **[Required]** All CE Router and/or AR interfaces in the direction of the CE Router shall support traffic conditioning on an aggregate granular service class basis on the input interface.

   NOTE: The product shall calculate or be configurable to support the bandwidth associated with traffic conditioning in accordance with RFC 3246, which requires that the queue size should account for the Layer 3 header (i.e., IP header), but not the Layer 2 headers (i.e., Point-to-Point Protocol (PPP), MAC, and so on) within a margin of error of 10 percent. This means, when other queues are not saturated; lower precedence traffic may surge beyond its queued traffic-engineered limit to use a higher precedence queue.

2. **[Required]** The system routers shall be able to traffic condition using IP addresses, protocol port numbers, and DSCPs as discriminators, as a minimum.

3. **[Required]** All CE Router and/or AR interfaces toward the CE Router shall support traffic conditioning on a granular service class basis on the output interface.

   NOTE: The product shall calculate or be configurable to support the bandwidth associated with traffic conditioning in accordance with RFC 3246, which requires that the queue size should account for the Layer 3 header (i.e., IP header), but not the Layer 2 headers (i.e., Point-to-Point Protocol (PPP), MAC, and so on) within a margin of error of 10 percent. This means, when other queues are not saturated; lower precedence traffic may surge beyond its queued traffic-engineered limit to use a higher precedence queue.

5.3.3.4 Assured VVoIP Latency

Latency is defined in Appendix A, Section A2, Glossary and Terminology Description, and the term is used interchangeably with the term IPTD.

The one-way latency metric is reported as the arithmetic mean of several (specified) single measurements over a 5-minute period. Corrupt and lost packets are excluded from the calculation. The metric is reported to 1 ms accuracy, rounded up, with a minimum value of 1 ms.

5.3.3.4.1 Assured VVoIP Router Serialization/Packet Switching Latency

[Required] All routers shall be capable of receiving, processing, and transmitting a voice packet within 2 ms or less in addition to the serialization delay for voice packets as measured from the input interface to output interface under congested conditions, as described in Section 5.3.1.4.1.1, ASLAN Voice Services Latency, to include all internal functions. For example, the serialization delay of a 100 Base-T interface is 0.017 ms, which would allow for voice latency from input to Ethernet output under congested conditions of 2.017 ms.

NOTE: Internal functions do not include DNS lookups and other external actions or processes.

5.3.3.4.2 Assured VVoIP End-To-End Latency

[Required] The E2E network infrastructure supporting VVoIP shall ensure that the one-way E2E latency (handset to handset) for F-F locations does not exceed 220 ms for VVoIP sessions as averaged over any 5-minute period. Figure 5.3.3-3, F-F E2E Latency, illustrates the measurement points for calculating the F-F E2E latency.

NOTE: The requirement for 220 ms is due to the limits of talk over. This latency may not be feasible for all scenarios (i.e., Southwest Asia (SWA)), but the requirement as stated is necessary to avoid talk over for the scenarios that are feasible.

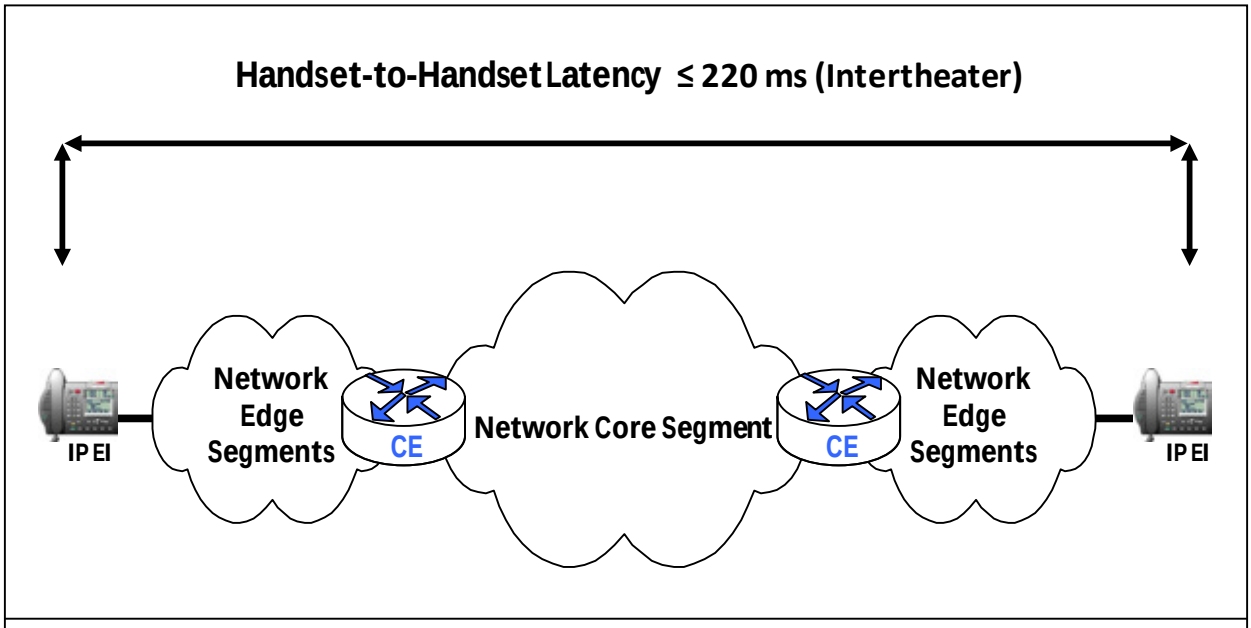

LEGEND

CE	Customer Edge Router	EI	End Instrument	ms	Millisecond
E2E	End-to-End	IP	Internet Protocol		

Figure 5.3.3-3. F-F E2E Latency

5.3.3.4.3 Assured VVoIP CE Segment Latency

1. **[Required]** The CE Segment supporting VVoIP shall ensure that the one-way latency from the IP handset to the egress interface of the CE Router within the CE Segment is less than or equal to 35 ms (or less than or equal to 44 ms if the CE Router is collocated with an AR) for VVoIP sessions as averaged over any 5-minute period. Figure 5.3.3-4, CE Segment Outbound Latency, illustrates the delays associated with calculating the CE Segment outbound latency. The measurements shall include the latency associated with the CE Router packet switching.

2. **[Required]** The CE Segment supporting VVoIP shall ensure that the one-way latency from the ingress interface of the CE Router to the IP handset within the CE Segment is less than or equal to 35 ms (or less than or equal to 44 ms if the CE Router is collocated with an AR) for VVoIP sessions as averaged over any 5-minute or period. Figure 5.3.3-5, CE Segment Inbound Latency, illustrates the delays associated with calculating the CE Segment inbound latency. The measurements shall include the latency associated with the CE Router packet switching.

   NOTE: This assumes the latency associated with the de-jitter buffer is 20 ms.

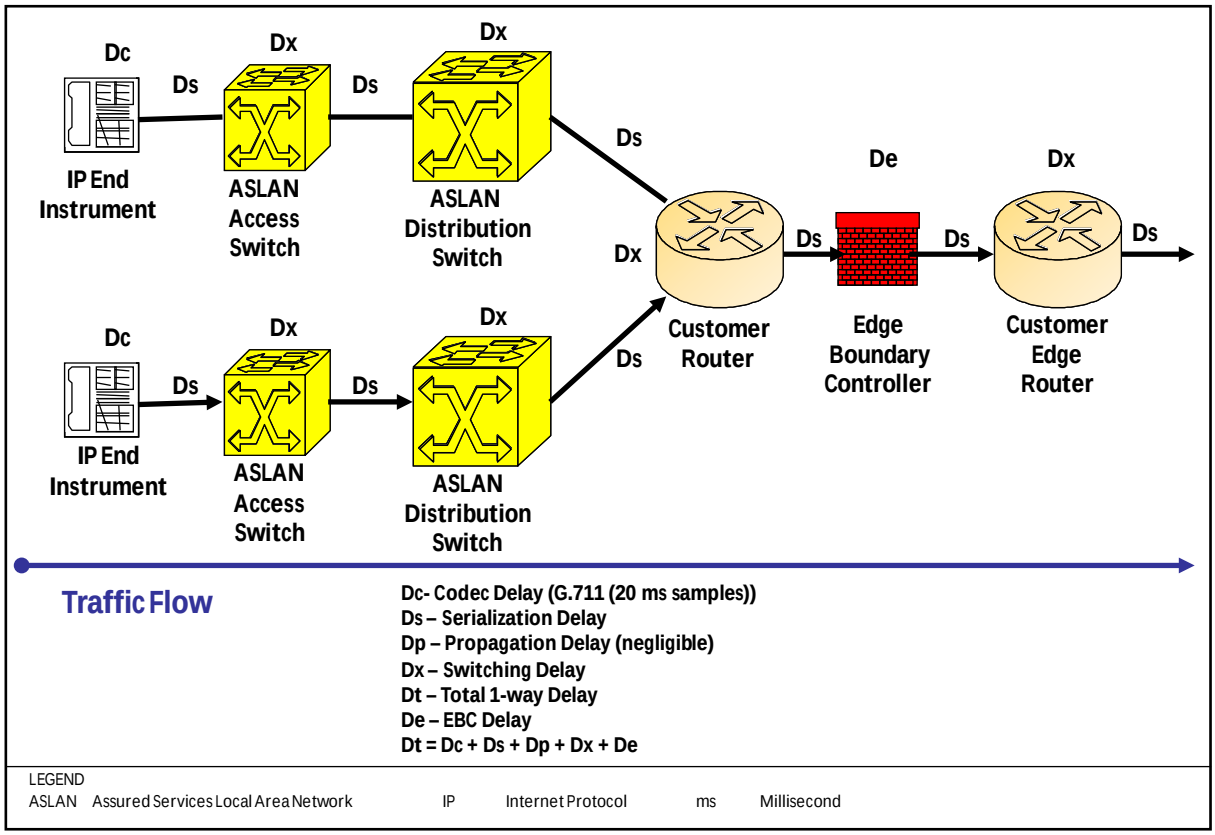

Figure 5.3.3-4. CE Segment Outbound Latency

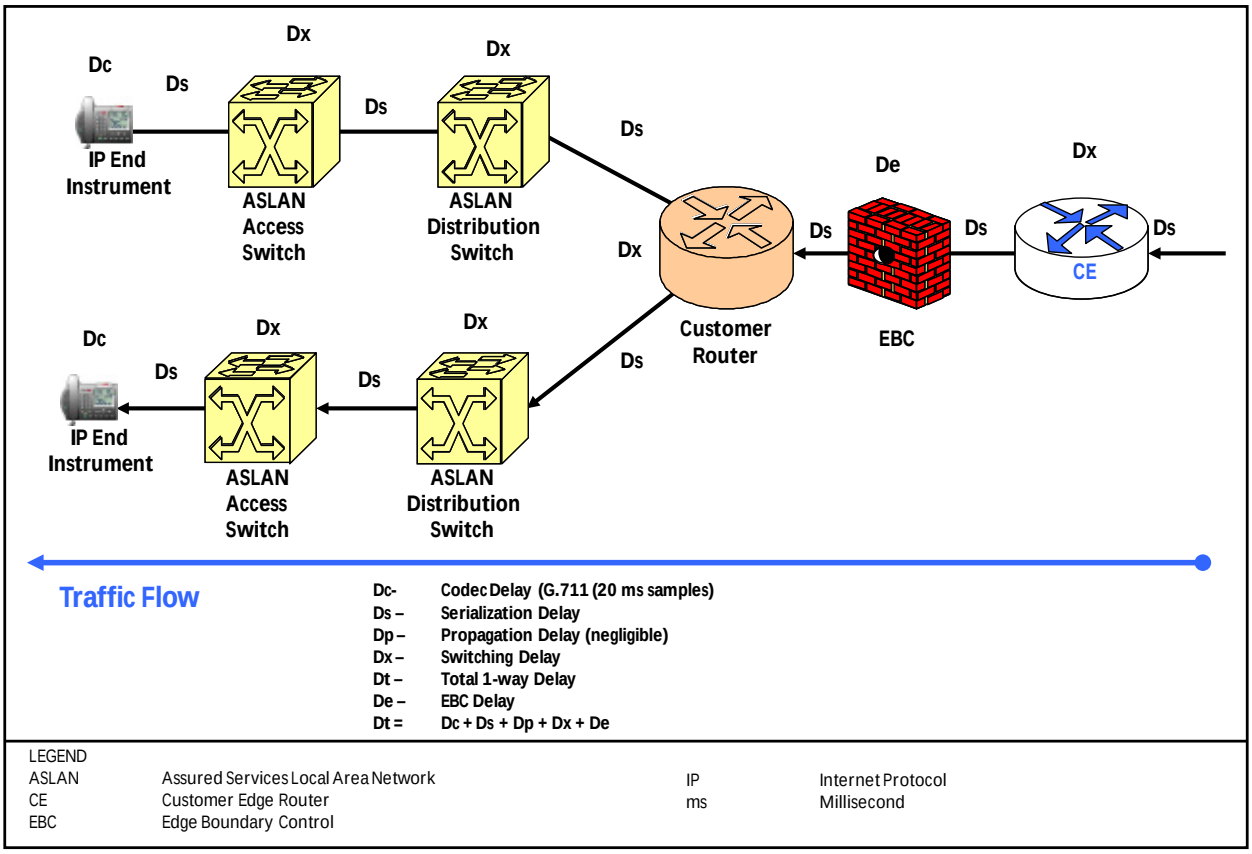

Figure 5.3.3-5. CE Segment Inbound Latency

5.3.3.4.4 Assured VVoIP AR-to-AR Latency

[Required] The network infrastructure supporting VVoIP shall ensure that the one-way latency measured from the ingress interface of an AR to the egress interface of another AR across the DISN WAN for F-F nodes does not exceed 130 ms latency for VVoIP sessions averaged over any 5-minute period. The measurement must take place between interfaces facing the CE Router to incorporate the packet switching delays through the network device. Figure 5.3.3-6, F-F AR-to-AR Latency, illustrates the measurement points for calculating the F-F AR-to-AR latency.

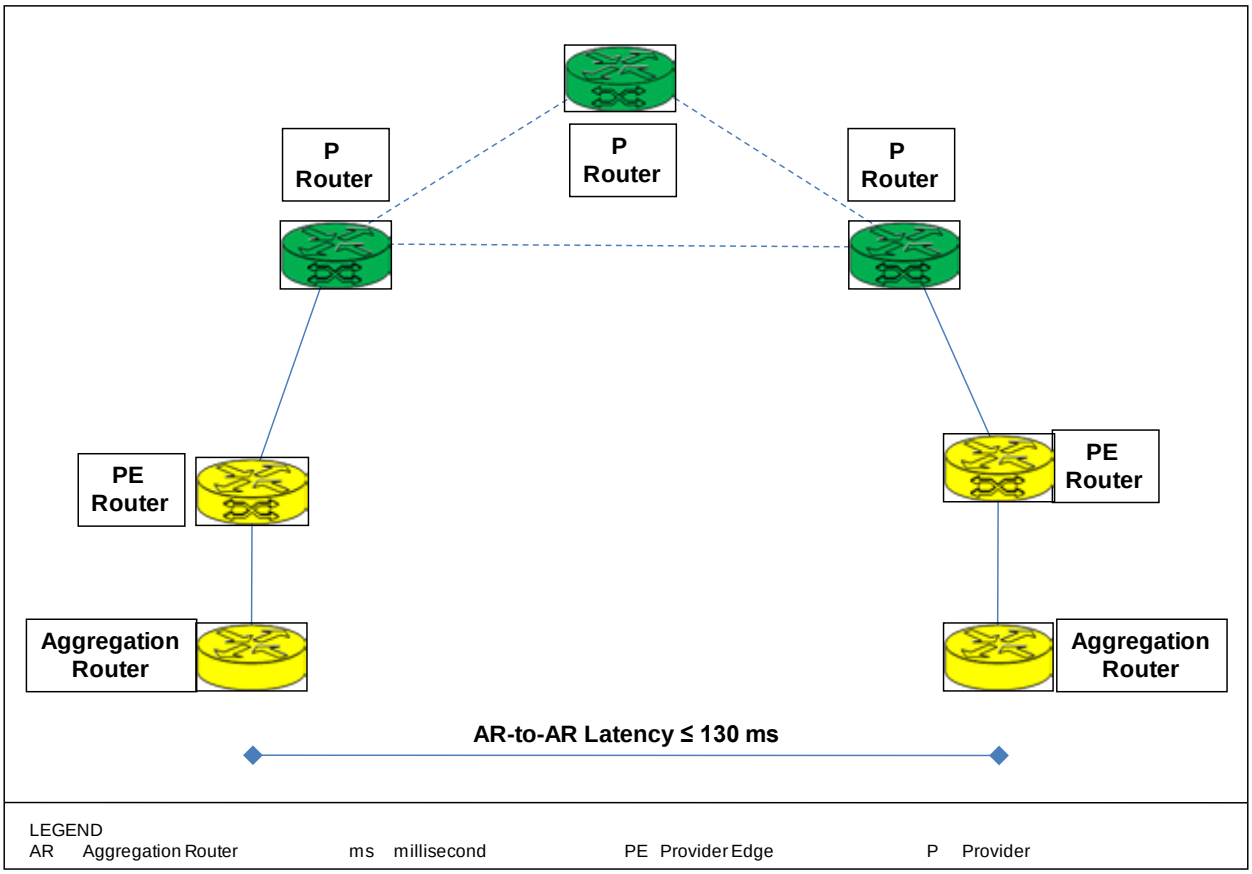

Figure 5.3.3-6. F-F AR-to-AR Latency

5.3.3.4.5 Assured VVoIP CE Router-to-CE Router Latency

[Required] The DISN Network Infrastructure supporting VVoIP shall ensure that the one-way latency measured from the ingress interface of a CE Router to the egress interface of another CE Router across the DISN Network Infrastructure for F-F nodes does not exceed 150 ms (or 132 ms if the CE Router is collocated with an AR) for VVoIP sessions averaged over any 5-minute period. The measurement must take place between interfaces inclusive of the traffic flow through the CE Router to incorporate the packet switching delays through the network device. Figure 5.3.3-7, F-F CE Router-to-CE Router Latency, illustrates the measurement points for calculating the F-F CE Router-to-CE Router latency.

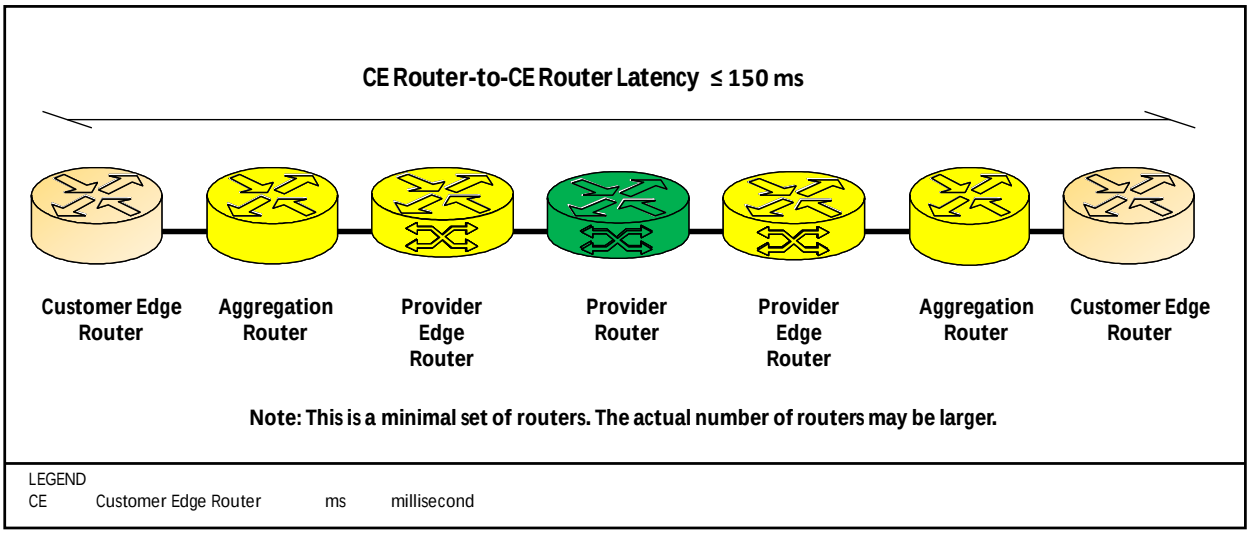

Figure 5.3.3-7. F-F CE Router-to-CE Router Latency

5.3.3.5 Assured VVoIP Jitter

Jitter is defined in Appendix A, Section A2, Glossary and Terminology Description, and the term is used interchangeably with the term IP Packet Delay Variation (IPDV). The jitter numbers specified in this section are based on the minimum latency jitter model defined in ITU-T Recommendation Y.1540, November 2007. The one-way jitter is defined as the 99th percentile measurement of the distribution of singleton jitter (n) measurements over a 5-minute measurement interval.

5.3.3.5.1 Assured VVoIP End-to-End Jitter

[Required] The E2E network infrastructure supporting VVoIP shall ensure that the E2E jitter (handset-to-handset) for F-F locations does not exceed 20 ms for VVoIP sessions during any 5-minute period. Figure 5.3.3-8, E2E F-F Jitter, illustrates the measurement points for calculating the F-F E2E network jitter.

NOTE: Dynamic de-jitter buffers are allowed, but for these performance measurements are assumed to be 20 ms.

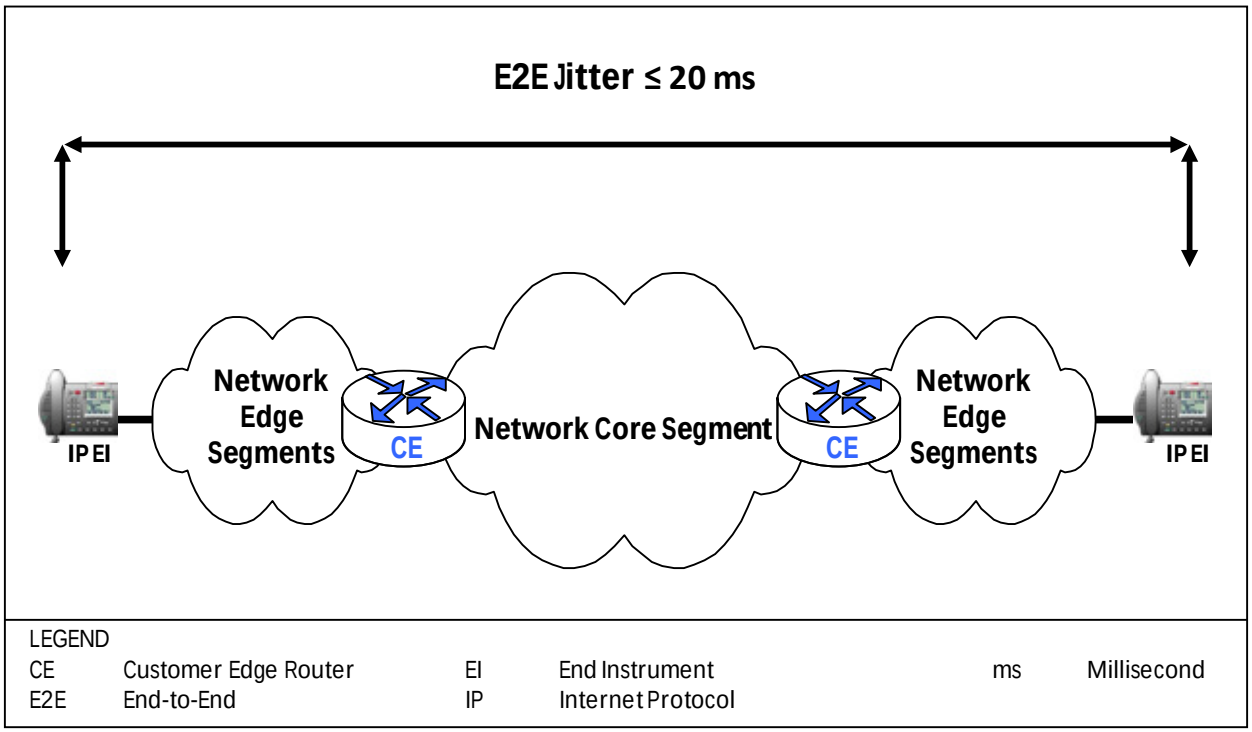

Figure 5.3.3-8. E2E F-F Jitter

5.3.3.5.2 Assured VVoIP AR-to-AR Jitter

[Required] The network infrastructure supporting VVoIP shall ensure that the one-way jitter measured from the ingress interface of an AR to the egress interface of another AR across the DISN WAN for F-F nodes does not exceed 10 ms for VVoIP sessions averaged over any 5-minute period. The measurement must take place between interfaces facing the CE Router to incorporate packet jitter delays through the network device. Figure 5.3.3-9, F-F AR-to-AR Jitter, illustrates the measurement points for calculating the F-F AR-to-AR jitter.

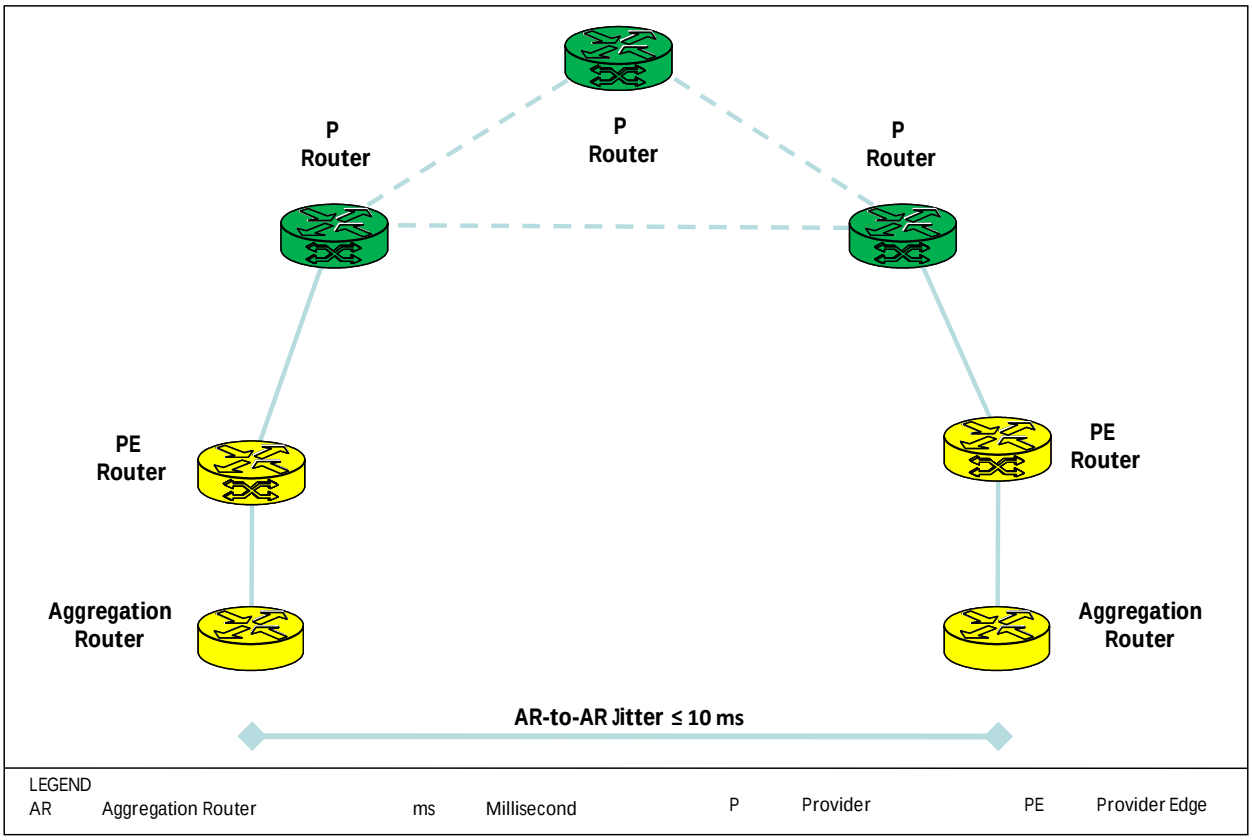

Figure 5.3.3-9. F-F AR-to-AR Jitter

5.3.3.5.3 Assured VVoIP CE Router-to-CE Router Jitter

[Required] The DISN Network Infrastructure supporting VVoIP shall ensure that the one-way jitter measured from the ingress interface of a CE Router to the egress interface of another CE Router across the DISN Network Infrastructure for F-F nodes does not exceed 14 ms (or 10 ms if the CE Router is collocated with an AR) for VVoIP sessions averaged over any 5-minute period. The measurement must take place between interfaces inclusive of the traffic flow through the CE Router to incorporate packet jitter delays through the network device. Figure 5.3.3-10, F-F CE Router-to-CE Router Network Infrastructure Jitter, illustrates the measurement points for calculating the F-F CE Router-to-CE Router network infrastructure jitter.

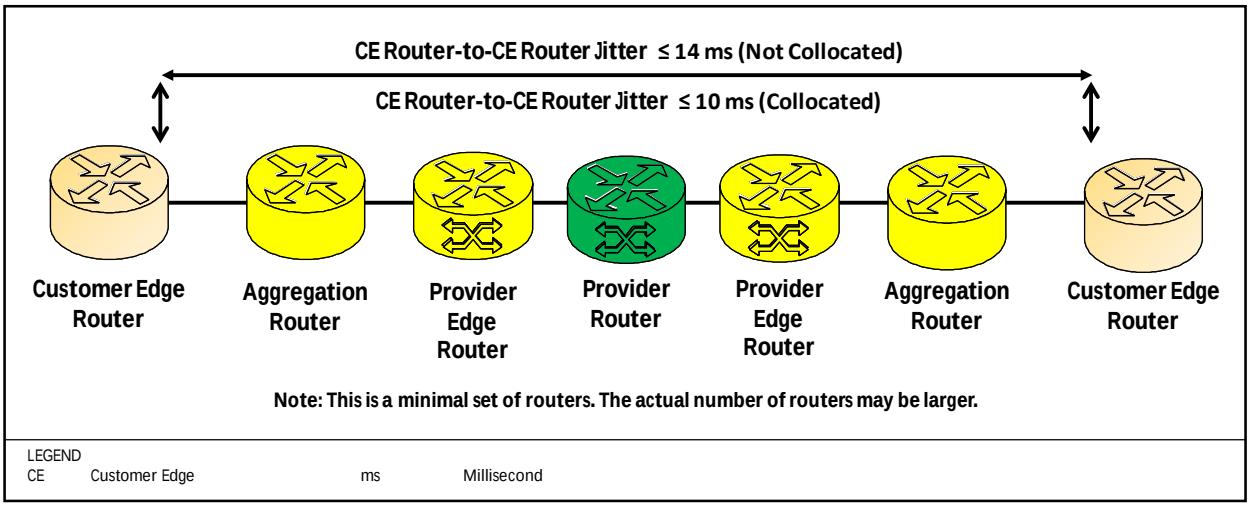

Figure 5.3.3-10. F-F CE Router-to-CE Router Network Infrastructure Jitter

5.3.3.5.4 Assured VVoIP CE Segment Jitter

[Required] The CE Segment supporting VVoIP shall be configured not to exceed a one-way jitter of 3 ms (or 5 ms if the CE Router is collocated with an AR) measured between the handset and the egress interface of the CE Router for VVoIP sessions during any 5-minute period.

5.3.3.6 Assured VVoIP Packet Loss

Packet loss is defined in Appendix A, Section A2, Glossary and Terminology Description, and the term is used interchangeably with the term IP Packet Loss Ratio (IPLR). A single instance of packet loss measurement is defined as a record of a packet sent by a sender reference point captured and compared at a destination reference point. The record is zero if the packet was received or one if the packet was not received. A packet is deemed to be lost if its one-way latency exceeds a time Tmax, where Tmax is equal to 3 seconds.

5.3.3.6.1 Assured VVoIP End-To-End Packet Loss

1. **[Required]** The E2E network infrastructure supporting VVoIP shall ensure that the E2E one-way IP packet loss, as measured from handset to handset, for current F-F deployed locations does not exceed 1.0 percent for VVoIP sessions averaged over any 5-minute period. Figure 5.3.3-11, E2E F-F Packet Loss, illustrates the measurement points for calculating the F-F E2E packet loss.

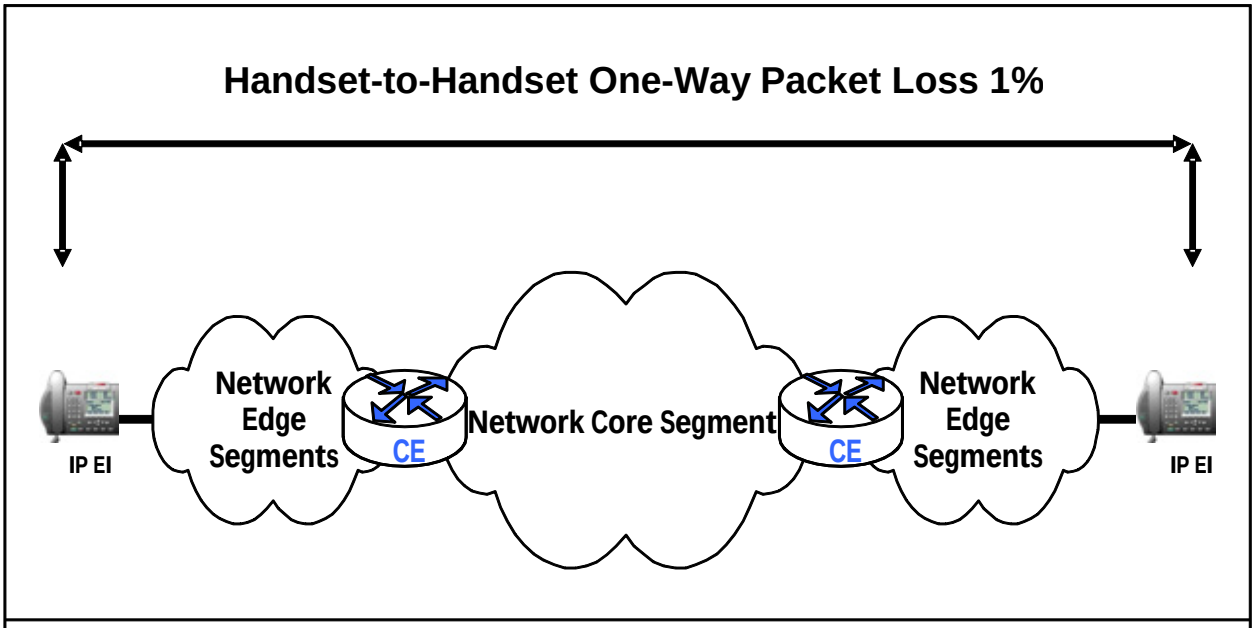

LEGEND					
CE	Customer Edge Router	IP	Internet Protocol	ms	Millisecond
EI	End Instrument				

Figure 5.3.3-11. E2E F-F Packet Loss

2. **[Required]** On all new network deployments, the E2E network infrastructure supporting VVoIP shall be designed and engineered for a one-way E2E packet loss for F-F locations of 0 percent for VVoIP sessions as averaged over any 5-minute period.

5.3.3.6.2 Assured VVoIP AR-to-AR Packet Loss

[Required] The network infrastructure supporting VVoIP shall ensure that the one-way packet loss measured from the ingress interface of an AR to the egress interface of another AR across the DISN WAN for F-F nodes does not exceed 0.3 percent for VVoIP sessions averaged over any 5-minute period. The measurement must take place between interfaces facing the CE Router to incorporate packet loss through the network device. Figure 5.3.3-12, F-F AR-to-AR Packet Loss, illustrates the measurement points for calculating the F-F AR-to-AR packet loss.

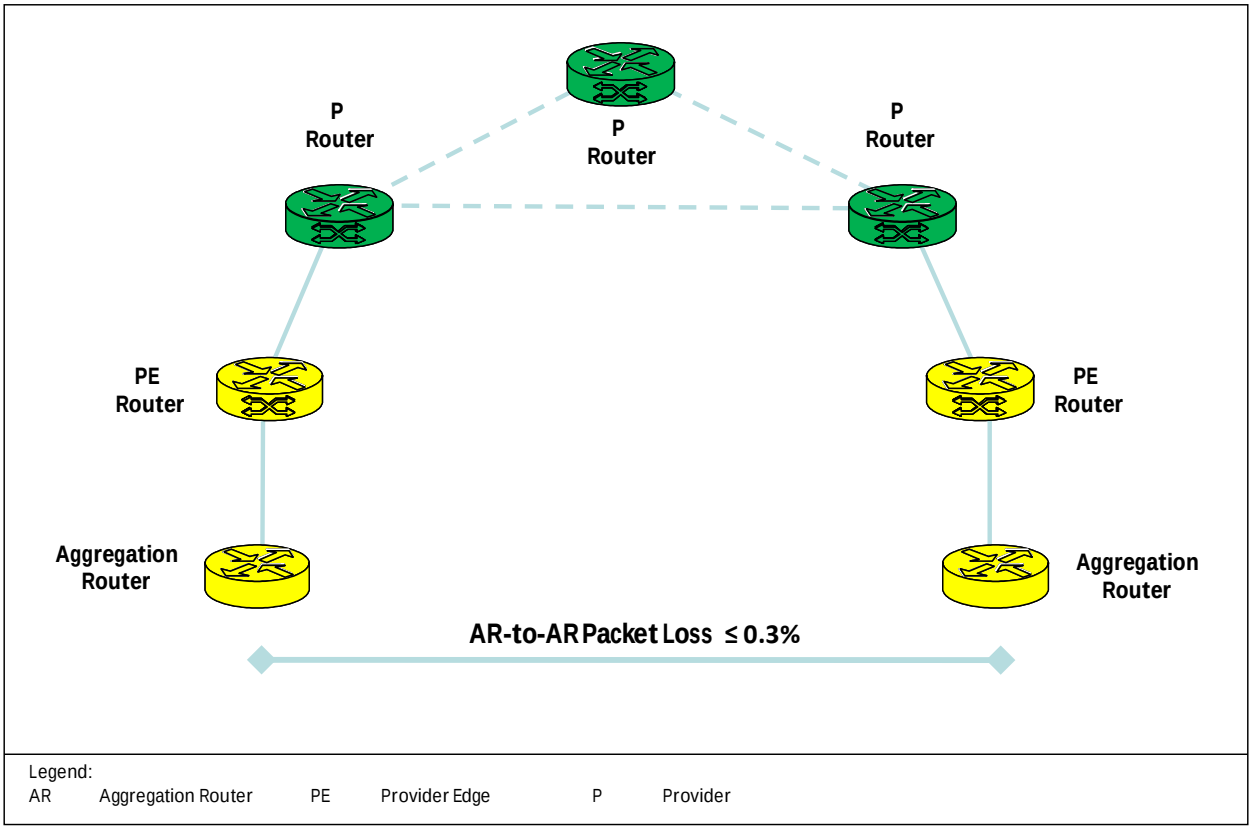

Figure 5.3.3-12. F-F AR-to-AR One Way Packet Loss

5.3.3.6.3 Assured VVoIP CE Router-to-CE Router Packet Loss

[Required] The DISN Network Infrastructure supporting VVoIP shall ensure that one-way packet loss measured from the ingress interface of a CE Router to the egress interface of another CE Router across the DISN Network Infrastructure for F-F nodes does not exceed 0.8 percent (0.3 percent if the CE Router is collocated with an AR) for VVoIP sessions averaged over any 5-minute period. The measurement must take place between interfaces inclusive of the traffic flow through the CE Router to incorporate packet loss through the network device. Figure 5.3.3-13, F-F CE Router-to-CE Router Network Infrastructure Packet Loss, illustrates the measurement points for calculating the F-F CE Router-to-CE Router packet loss.

NOTE: This assumes packet loss between a collocated CE Router and AR is 0.01 percent or less.

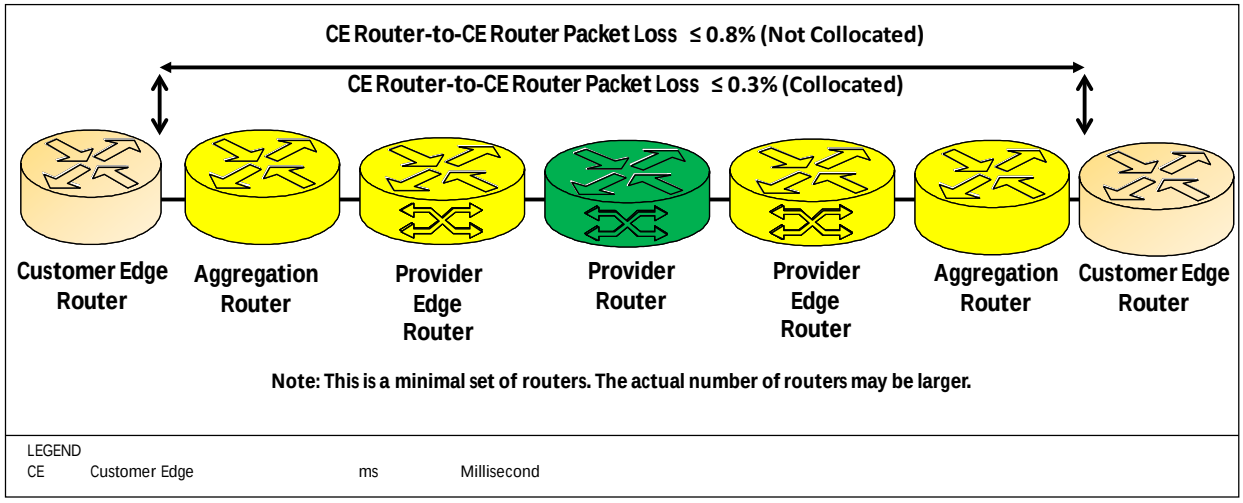

Figure 5.3.3-13. F-F CE Router-to-CE Router Network Infrastructure Packet Loss

5.3.3.6.4 Assured VVoIP CE Segment Packet Loss

[Required] The CE Segment supporting VVoIP shall ensure that the one-way packet loss between the handset and CE Router does not exceed 0.05 percent for VVoIP sessions as averaged over any 5-minute period.

5.3.3.7 Non-Assured VoIP

The performance objectives for assured VoIP and non-assured VoIP are the same except with respect to E2E and AR-to-AR latency. Unlike assured VoIP, non-assured VoIP does not support Command and Control (C2) users and does not require as stringent performance objectives as assured VoIP. As a result, non-assured VoIP is engineered for a MOS of 3.8, which is consistent with the performance of commercial wireless voice services. In accordance with the G.107 MOS model, a MOS of 3.8 can be achieved with a packet loss of 1 percent using the G.711 Codec when the latency is less than 250 ms. Therefore, E2E and AR-to-AR performance objectives for non-assured VoIP latency are no longer the same E2E and AR-to-AR performance objectives for assured VoIP latency. The performance objectives for non-assured VoIP are listed in Table 5.3.3-4, Summary of Granular Service Class Performance Objectives. Latency objectives for non-assured VoIP are also illustrated in Figure 5.3.3-14, Latency Objectives for Non-Assured VoIP.

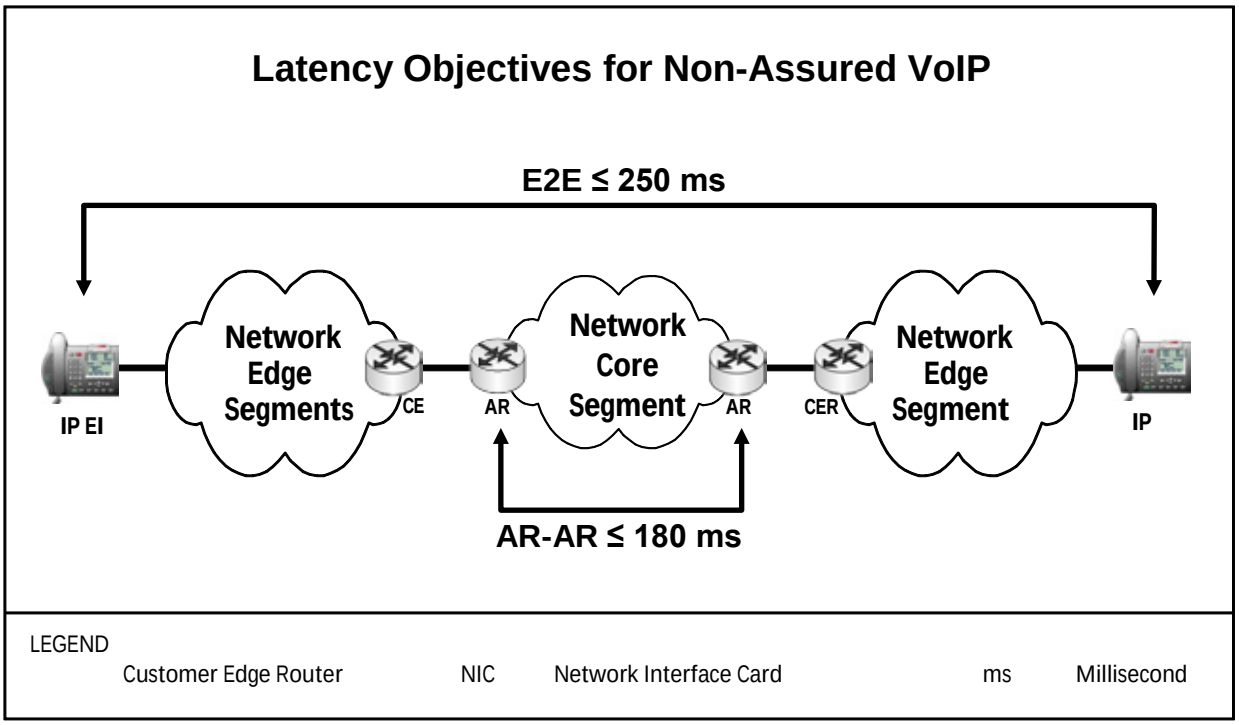

Figure 5.3.3-14. Latency Objectives for Non-Assured VoIP

5.3.3.8 Data Applications

The performance of data applications will be measured at the same points as assured voice with the exception of E2E data performance, which will be measured from NIC to NIC instead of from IP Voice EI to IP Voice EI. The performance objectives for data applications are listed in Table 5.3.3-4, Summary of Granular Service Class Performance Objectives.

o

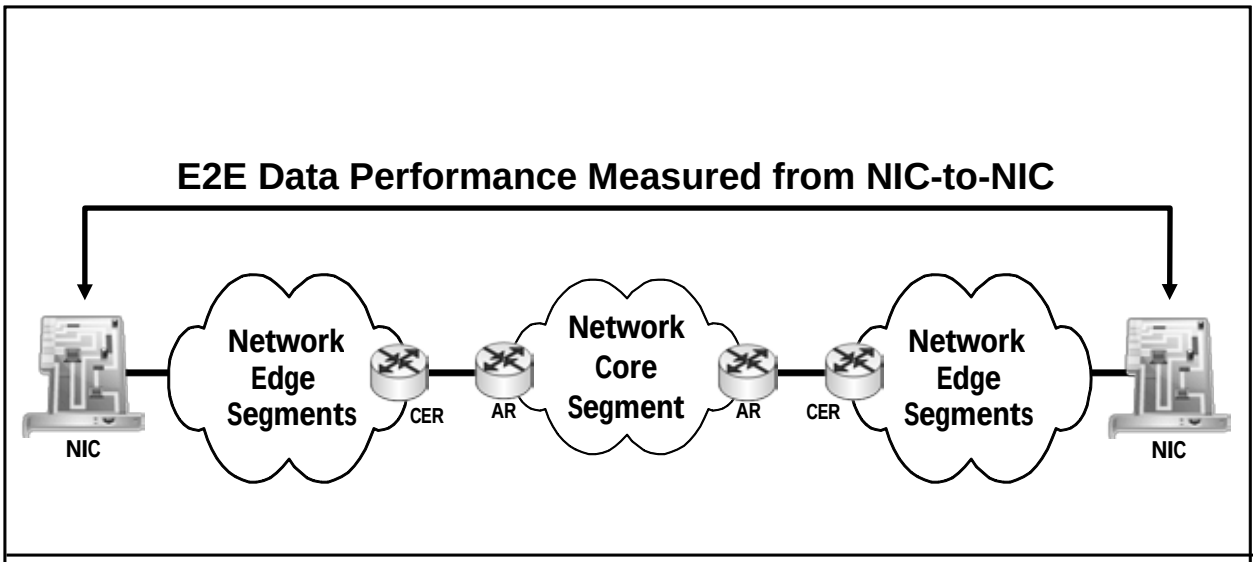

LEGEND

AR	Aggregation Router	CER	Customer Edge Router	E2E	End-to-End
NIC	Network Interface Card	Ms	Millisecond		

Figure 5.3.3-15. E2E Performance Measured from NIC to NIC

5.3.3.9 Summary of Granular Service Class Performance Objectives

Table 5.3.3-4 summarizes the performance objectives for each granular service class. Performance objectives are listed in a manner similar to Sections 5.3.3.4–5.3.3.6 for VVoIP where performance budgets are shown for EI-EI, AR-AR, and EI-CE Router. Unless stated otherwise, this table shows one-way performance requirements.

Table 5.3.3-4. Granular Service Class Performance Objectives

GRANULAR SERVICE CLASS	E2E Latency (ms)	AR-AR Latency (ms)	EI-CER Latency (ms)	E2E Packet Loss (%)	AR-AR Packet Loss (%)	EI-CER Packet Loss (%)	E2E Jitter (ms)	AR-AR Jitter (ms)	EI-CER Jitter (ms)
Short Messaging	1000	900	50	0.5	0.4	0.05			
Assured Voice	220	150	35	1	0.8	0.05	20	14	3
Assured Multimedia Conferencing	220	150	35	1	0.8	0.05	20	14	3
Broadcast Video	1000	900	50	0.1	0.08	0.01			
Multimedia Streaming (includes Non-Assured Video)	250	180	35	1	0.8	0.05	20	14	3

GRANULAR SERVICE CLASS	E2E Latency (ms)	AR-AR Latency (ms)	EI-CER Latency (ms)	E2E Packet Loss (%)	AR-AR Packet Loss (%)	EI-CER Packet Loss (%)	E2E Jitter (ms)	AR-AR Jitter (ms)	EI-CER Jitter (ms)
Non-Assured Voice	250	180	35	1	0.8	0.05	20	14	3
Low Latency Data : IM/Chat, Presence	300	200	50	1	0.8	0.05			
High Throughput Data	300	200	50	1	0.8	0.05			
NOTE: Not All Aggregate Service Classes Have Performance Objectives (Best Effort, Signaling, Network Control, & Low Priority)									

5.3.3.10 Internet Protocol Version 6

[Required] The network infrastructure products supporting VVoIP shall accept, route, and process IPv6 protocol traffic while providing parity to IPv4.

NOTE 1: The goal of this requirement is to permit applications and data owners to complete operational transition to IPv6 with at least the same functionality as currently found in IPv4.

NOTE 2: The IPv6 requirements are found in Section 5.3.5, IPv6 Requirements.

It is assumed that:

1. The serialization and switching delay increases associated with larger IPv6 packets in comparison to IPv4 packets is insignificant.

2. The latency calculations are the same for IPv4 and IPv6 implementations.

3. Any improvements in the router processing speed due to the simplified IPv6 header will be ignored.

5.3.3.11 VVoIP Network Infrastructure Network Management

The VVoIP Network Infrastructure NM requirements are found in Section 5.3.2.17, Management of Network Appliances.

5.3.3.12 System-Level Quality Factors

5.3.3.12.1 End-to-End Availability

The definition of availability, found in the Telcordia Technologies GR-512-CORE, Section 12, is the basis for the E2E VVoIP network reliability. The following paragraphs outline the availability requirements for the VVoIP network.

Figure 5.3.3-14, F-F Network Infrastructure Availability, illustrates the measurement points for calculating the F-F network availability.

1. **[Required]** The availability for the handset-to-handset network infrastructure between F-F locations serving VVoIP users shall be (inclusive of scheduled maintenance):

    a. ROUTINE precedence (R) 99.56 percent or greater
    b. IMMEDIATE precedence (I/P) 99.95 percent or greater
    c. FLASH or FLASH OVERRIDE precedence (FO/F) 99.96 percent or greater

2. **[Required]** The availability for the network infrastructure within the F-F from AR to AR shall be 99.998 percent or greater to include scheduled maintenance.

3. **[Required]** The availability for the network infrastructure within the F-F from CE Router to CE Router shall be 99.96 percent or greater to include scheduled maintenance.

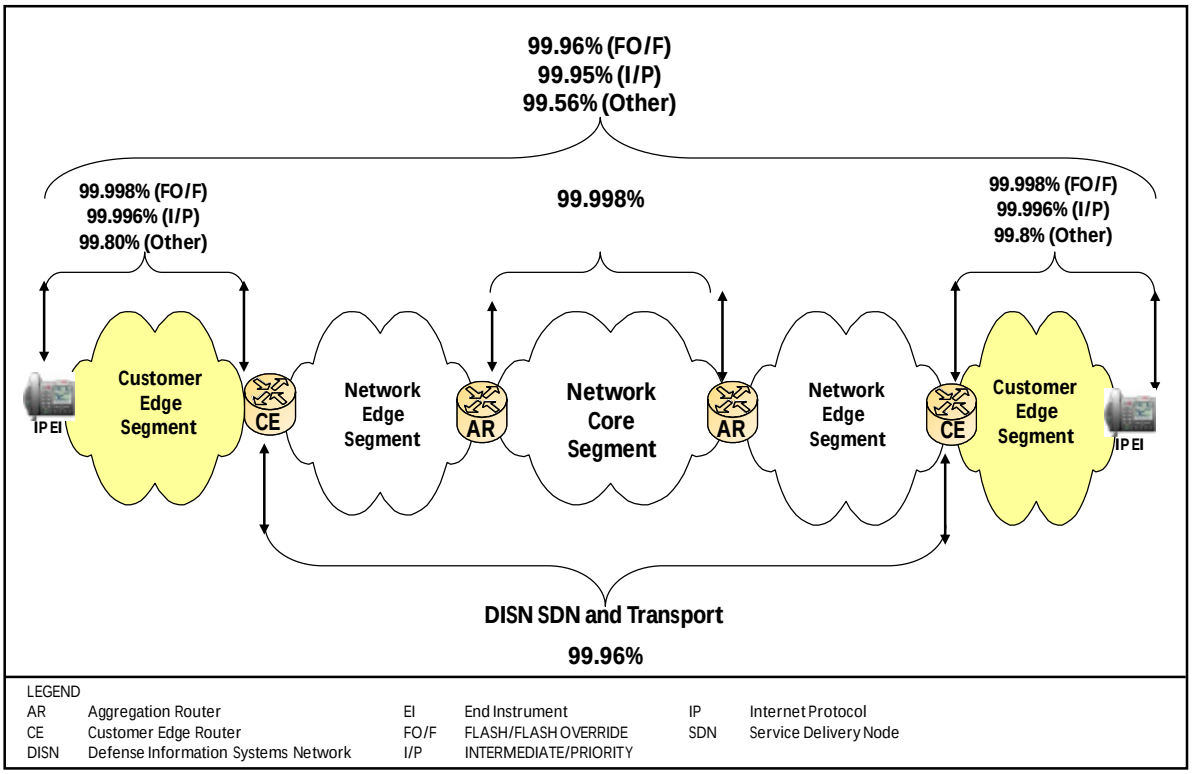

Figure 5.3.3-16. F-F Network Infrastructure Availability

4. **[Required]** The availability to include scheduled maintenance for the network infrastructure within a CE Segment, which includes ASLAN and EBC shall be 99.998 percent or greater for FO/F users, 99.996 percent or greater for I/P users, and 99.8 percent or greater for R level users.

   NOTE: The availability calculations will be based on best practices because there appears to be no standardized model for calculating IP network availability.

5.3.3.12.2 Availability Design Factors

1. **[Required]** The E2E network infrastructure supporting VVoIP users with precedence above ROUTINE shall have no single point of failure to include power sources and NM.

2. **[Required]** The National Military Command Center (and Alternate), COCOMs, or Component headquarters shall not be isolated longer than 30 minutes because of an outage in the Core Segment of the network.

3. **[Required]** In the event of an E2E network infrastructure component failure in a network supporting VVoIP users with precedence above ROUTINE, all sessions that are active

shall not be disrupted (i.e., loss of existing connection requiring redialing) and a path through the network shall be restored within 5 seconds.

4. **[Required]** If the Edge Segment is dual-homed or multi-homed, then the VVoIP traffic shall be engineered to only use one access connection at a time to prevent asymmetric routing.

   NOTE: Data traffic should be engineered to use the alternate connection and serve as the VVoIP traffic redundant link.

5. **[Required]** No segment of the E2E network infrastructure shall use the same cost metric on dual-homed or multi-homed configurations forcing the same VVoIP routing stream to be split into two distinct interfaces.

   NOTE: Cost metric redundancy routing is a technique used to provide survivability by sending packets associated with a session across multiple paths through the network infrastructure. This technique often introduces unacceptable and hard to troubleshoot latency and jitter on real time services and applications.

6. **[Required]** All network infrastructure products supporting VVoIP users with precedence above ROUTINE shall have 8 hours of backup power.

   NOTE: This requirement does not address ASLAN backup power requirements, which are addressed in Section 5.3.1, ASLAN Infrastructure Product Requirements.

7. **[Conditional]** If the Edge Segment supports users with precedence above ROUTINE, then the Edge Segment shall be multi-homed, which means two separate access connections provisioned on physically diverse paths via two different ARs to two different service providers. Multi-homing is physically and logically diverse in accordance with the DISN subscription rates.

8. **[Conditional]** If the Edge Segment is dual-homed or multi-homed, and supports users with precedence above ROUTINE, then each connection must be traffic engineered to support 100 percent, which includes the 25 percent surge requirement of the VVoIP traffic load.

9. **[Conditional]** If the Edge Segment supports users with precedence above ROUTINE and the CE Router is collocated with an SDN containing a robust MSPP, then a separate access connection to another robust SDN shall be used for redundancy.

5.3.3.12.3 Product Quality Factors

1. **[Required]** End-to-end network infrastructure products supporting VVoIP users with precedence above ROUTINE shall support a protocol that allows for dynamic rerouting of IP packets to eliminate any single points of failure in the network.

2. **[Required]** All network infrastructure products supporting VVoIP users with precedence above ROUTINE used to meet the reliability requirements shall be capable of handling the entire session processing load in the event that its counterpart product fails.

3. **[Required]** All network infrastructure products supporting VVoIP that implement MPLS shall support a fast Reroute (FRR) capability that restores routing paths following a local failure (i.e., a failure involving a single router or circuit) within 50 ms.

4. **[Required]** Network infrastructure routers shall only enact switchovers based on a reduction in access network throughput or bandwidth with Network Management (NM) troubleshooting procedures, because the routers cannot determine where or what in the access IP connection is the cause of the reduction.

5. **[Conditional]** If the network infrastructure supports users with precedence above ROUTINE, then the network infrastructure routers shall provide five nines of availability (99.999 percent)to include scheduled maintenance.

   NOTE: The availability calculations will be based on best practices because there appears to be no standardized model for calculating router availability. In addition, the network infrastructure router availability requirements may be met using dual homing and other routing techniques, or the use of high-availability routers (e.g., 99.999 routers).

6. **[Conditional]** If the Edge Segment has at least two separate access connections and the CE Router detects an access connection failure, the CE Router shall be configured to dynamically switch to the alternate or backup access connection.

   NOTE: A failure may be detected via a physical link alarm (level 2), or via a loss of a dynamic routing protocol HELLO status message (level 3).

7. **[Conditional]** If the CE Router has at least two separate access connections (i.e., dual-homed or multi-homed) and detects an access connection failure, the CE Router shall switch to the alternate or backup access connection using an automatic process and shall not require operator actions.

   NOTE: When the switchover occurs, VVoIP sessions in progress may be lost, and new sessions may not be able to be established until the IP routing updates have taken place.

This may take 10 seconds or more and is dependent on the routing protocol standard update interval.

8. **[Conditional]** If the Edge Segment has at least two access connections to provide redundancy, then the network administrators shall implement a standard operating Procedure for switching VVoIP traffic between access connections at least on a weekly basis to verify that the alternate circuit or path is working properly.

5.3.3.12.4 Materials

5.3.3.12.4.1 Layer 1 – Physical Layer

[Required] All F-F network infrastructure network connections supporting VVoIP shall have at a minimum, T1 bandwidth of 1.544 Mbps or greater.

5.3.3.12.4.2 Layer 2 – Data Link Layer

1. **[Required]** The E2E network infrastructure (excluding session originators) supporting VVoIP sessions shall use the media default Maximum Transmission Unit (MTU). The media default MTU for Ethernet is 1500 bytes.

2. **[Required]** The E2E network infrastructure supporting VVoIP sessions shall permit packet fragmentation.

   NOTE 1: Packet fragmentation allows packets to be fragmented, instead of discarded, if the path MTU is less than the MTU size of the packet transiting the path. This requirement is associated primarily with signaling and NM packets, because the bearer packets are smaller than the MTU.

   NOTE 2: Unlike IPv4, fragmentation in IPv6 is performed only by source nodes, not by routers along a packet's delivery path.

3. **[Conditional]** If the unclassified Edge System product supporting VVoIP uses an Ethernet interface for connecting to the LAN, then its NIC MTU size shall be set to 1400 bytes. The use of the MTU as specified will allow for overhead associated with encryptors or VPNs without causing packet fragmentation.

4. **[Conditional]** If the classified Edge System product supporting VVoIP uses an Ethernet interface for connecting to the LAN, then its NIC MTU size shall be set to 1280 bytes. The use of the MTU as specified will allow for overhead associated with encryptors or VPNs without causing packet fragmentation.

5. **[Required]** All E2E Ethernet network infrastructure interfaces supporting VVoIP shall be configured to full-duplex communication.

6. **[Required]** All E2E Ethernet network infrastructure interfaces shall support auto-negotiation as described in the IEEE 802.3 series of standards.

7. **[Required]** All E2E Ethernet network links supporting VVoIP shall not exceed IEEE 802.3 working group standards produced for wired Ethernet. Recommended distances for Ethernet cabling are shown in Table 5.3.3-5, IEEE Recommended Distances for Ethernet Cabling.

   NOTE: The use of repeaters is permitted to extend Ethernet distances.

Table 5.3.3-5. IEEE Recommended Distances for Ethernet Cabling

	10BASE-T ETHERNET	**100BASE-T FAST ETHERNET**	**1000BASE-T GIGABIT ETHERNET**
CAT5, 6 UTP, CAT5e	330 ft 100 m	330 ft 100 m	330 ft 100 m
Multimode Fiber	6600 ft 2 km	6600 ft 2 km	1830 ft 550 m
Single-mode Fiber	15 mi 25 km	12 mi 20 km	3 mi 5 km
NOTE: All distances are for full-duplex communications. In addition, it is understood that 10GBASE-T is an acceptable alternative, but the variety of cabling and distances are beyond the scope of this table.			
LEGEND: Base Baseband km Kilometer UTP Unshielded Twisted Pair CAT Category m Meter ft Foot mi Mile			

5.3.3.13 Bandwidth Provisioning

The bandwidth required per supported voice session on the Ethernet network infrastructure is 220 kbps (110 kbps each direction). This is based on G.711 (20 ms) with IP overhead (105 kbps) associated with the Ethernet Interframe Gap and the use of SRTP to secure the voice bearer. In addition, it includes the overhead associated with the SRTCP (5 kbps), which is used for providing voice performance statistics for the voice bearer. Since no assumption can be made about whether the traffic is IPv4 or IPv6, the scenario resulting in the higher bandwidth is used (IPv6).

1. **[Required]** The E2E network infrastructure supporting VVoIP shall assume the use of G.711 (20 ms) for calculating bandwidth budgets within F-F networks even if compressed codecs are used. For example, if G.729 is used for an F-D VVoIP session, then the budget for the fixed portion of the network must allocate 110 kbps to that session even though the session uses less bandwidth.

2. **[Required]** Access connections supporting VVoIP shall be engineered to support one WAN (trunk) voice session (110 kbps of IP bandwidth in each direction) for every four EIs within the Edge Segment (NOTE: The 4/1 ratio does not include surge); or shall be traffic engineered IAW the following approach:

   a. Determine the busy hour traffic load in Erlangs from current traffic pattern, matrix, or call volume using the following formula and use the Erlang B table to determine the number of connections/size of connection required to support the traffic load.

      Busy Hour Offered Load = Total Call Time for the Busy Hour in Seconds/10 (averaged over the 10 busiest hours of the year)

      Busy Hour Erlang = Busy Hour Offered Load in Seconds/3600

   b. Calculate the Access Connection bandwidth requirement based on the following assumptions:

      Assumptions:

Call Arrival Distribution	=	Poisson
Codec Type	=	G.711 (coding rate: 64000 bits/sec)
Frame Size	=	20 ms interval time (0.020 sec)
Samples/Packet	=	160 samples per packet
Frames/Packet	=	1
Frames/Second	=	50
Frame Size/Packet	=	160 bytes
Ethernet Interframe Gap	=	12 bytes
SRTP Authentication Tag	=	4 bytes
Frames/Erlang	=	50
Packets/Second/Erlang	=	50
Packet Size (for Ethernet)	=	262 bytes (assumes IPv6)
Access Bandwidth Formula	=	Busy Hour Erlang B * Packet Size * Packets/Second/Erlang B* 8 bits/byte

      For example, if the Busy Hour Erlang B equals 25, then the access bandwidth should be 25*262*50*8 = 2,620,000 bits per second (bps) or 2.6 Mbps.

3. **[Required]** A B/P/C/S shall not reduce the number of simultaneous Access Connection (trunk) subscriptions to the DISN when they migrate from TDM to IP unless traffic engineering is completed IAW the preceding requirement.

   NOTE: For instance, if the existing B/P/C/S subscribed for 100 simultaneous DS0s to the DISN with their TDM infrastructure, but the engineered IP solution only requires 90

multiplied by 110 kbps of bandwidth, then the B/P/C/S design must support 100 multiplied by 110 kbps of bandwidth to meet this requirement.

4. **[Required]** The E2E network infrastructure design shall provide, at a minimum, a 25 percent increase in network capacity (i.e., throughput and number of sessions) above the current employed network capacity at all tandem switches, MFSs, MFSSs, and critical dual-homed EO switches and LSCs.

5. **[Required]** The long-haul portion of the network infrastructure shall be able to support a regional crisis in one theater, yet retain the surge capability to respond to a regional crisis occurring nearly simultaneously in another theater.

5.3.3.14 IP Routing Protocols

1. **[Required]** All Edge System routers supporting VVoIP shall support, as a minimum, the following routing protocols and methods:

   a. Static Routing: Static routing is the concept of configuring path selection of routers in computer networks. It is characterized by manually adding routes to the routing table. It is one method for interfacing CE Router and AR routers in the DISN.

   b. BGP-4. The BGP-4 is a protocol for exchanging routing information between gateway hosts (each with its own router) in a network of autonomous systems and is described in RFCs 4271 and 1772. It is a second method for interfacing between the CE Router and the AR and typically is associated with dual-homed Edge Segments.

      NOTE: The IPv6 requirements for BGP-4 are specified in Section 5.3.5, IPv6 Requirements.

   c. Intermediate System-to-Intermediate System Protocol (IS-IS). The IS-IS is an OSI protocol by which intermediate systems exchange routing information. This protocol is not intended to be used as the protocol to interface to the ARs.

      OR

      OSPF. The OSPF is an Interior Gateway Protocol used to route IP packets within a routing domain. The OSPF version 2 for IPv4 is described in RFC 2328. Updates to OSPF for IPv6 are described in RFC 5340.

      NOTE: Further IPv6 requirements for OSPF are specified in Section 5.3.5, IPv6 Requirements.

d. Multiprotocol Label Switching (MPLS): MPLS provides the advantage of routers making packet-forwarding decisions based only on the contents of its label, without the need to examine the packet header. This allows for the creation of end-to-end circuits across any type of transport medium, using any protocol. The key benefit of this approach is that it eliminates reliance on a specific data link layer technology (ATM, frame relay, SONET or Ethernet). CE Routers and ARs should adhere to the requirements found in Section 5.3.1.8.4, MPLS Requirements.

2. **[Conditional]** Graceful Restart (GR) is a mechanism to prevent routing protocol reconvergence during a processor switchover. Traditionally, when a networking device restarted, routing peers associated with that device detected the device as down and routes from that peer were removed. The sessions were then reestablished when the device completed its restarting sequence. This transition resulted in removal and reinsertion of routes, which spread across multiple routing domains. This was required because of the inability of the restarting device to forward traffic during the reload period. Today, dual processor systems that support Stateful Switch Over (SSO) or In-Service Software Upgrades (ISSU) can continue to forward traffic while restarting the control plane on the second processor. In this case, route removal and insertion caused by routing protocol restarts is no longer necessary, creating unnecessary routing instabilities, which are detrimental to the overall network performance. Graceful Restarts suppress routing changes on peers to SSO-enabled devices during processor switchover events (SSO or ISSU), reducing network instability and downtime.

   a. BGP-4 GR: BGP GR shall be configured in accordance with RFC 4724.

   b. OSPFv2 GR: OSPFv2 GR shall be configured in accordance with RFC 3623.

   c. OSPFv3 GR: OSPFv3 GR shall be configured in accordance with RFC 5187.

5.3.3.15 Voice Grade of Service

The GOS is defined in Appendix A, Section A2, Glossary and Terminology Description. In addition, the voice and video (VVoIP only) GOS are calculated independently since the budgets associated with each are independent

1. **[Required]** The E2E network infrastructure shall provide a GOS of P.00 (i.e., zero sessions out of 100 will be “blocked” during the “busy hour”) for FLASH and FLASH OVERRIDE voice and video (VVoIP only) sessions. This is also referred to as nonblocking service.

2. **[Required]** The E2E network infrastructure shall provide a GOS of P.02 (i.e., two sessions out of 100 will be blocked during the busy hour) and P.01, respectively, during a 100

percent increase above normal precedence usage for PRIORITY and IMMEDIATE voice and video (VVoIP only) sessions at a minimum.

3. **[Required]** The E2E network infrastructure supporting VVoIP shall provide a peacetime theater GOS of P.07 (i.e., seven voice sessions out of 100 will be blocked during the busy hour) or better, and an intertheater GOS of P.09 or better, as measured during normal business hours of the theaters for ROUTINE precedence voice and video (VVoIP only) sessions traversing the network from an EO or LSC EI and/or AS-SIP EI.

4. **[Required]** The CE Segment supporting VVoIP shall provide a GOS between the EO and any PBX users or between an LSC and its subtended LSC that do not exceed an additional blockage of P.02 for voice or video (VVoIP video only) sessions.

5.3.3.16 VVoIP Network Infrastructure Survivability

The following requirements contribute to the survivability of the VVoIP system:

[Required] No more than 15 percent of the B/P/C/Ss shall be affected by any outage in the network. This includes issues such as overtaxing of processing capacity, link failure, and redundancy failover glitches.

5.3.3.17 Voice Service Quality

1. **[Required]** Because intelligibility of voice communications is critical to C2, the voice service quality rating, on at least 95 percent of the voice sessions, will have an MOS IAW the following scenarios:

   a. Fixed to Fixed Assured Voice – 4.0
   b. Fixed to Fixed Non-Assured Voice – 3.8
   c. Fixed to Deployable Assured Voice – 3.6
   d. Deployable to Deployable Assured Voice – 3.2

2. **[Required]** The method used for obtaining the MOS shall be IAW the DoD Information Technology Standards Registry (DISR), which currently aligns with the use of the E-Model and TSB-116-A (03/2006) for F-F scenarios, and P.862 (02/2001) for Deployable scenarios.

5.3.3.18 Performance Quality Monitoring and Measurement

To measure and monitor the quality of the voice service, the MILDEP will need to acquire a performance measurement tool (PMT). The E2E NM and monitoring of the quality of the voice

service is described in Section 5.3.2.17, Management of Network Appliances. The requirements for the PMT are defined as follows:

1. **[Required: PMT]** The product shall convert network metrics to R-Factor-derived MOS based on ITU G.107 E-model for IP voice for use between Fixed Edge sites.

2. **[Required: PMT]** The product shall convert network metrics to a MOS factor based on the ITU-T Recommendation P.862, Perceptual Evaluation of Speech Quality (PESQ) for IP voice between Deployable Edge sites, or Fixed and Deployable Edge sites.

3. **[Required: PMT]** The product shall convert network metrics for IP video performance to the quality metric described in ITU Recommendation G.1070.

4. **[Required: PMT]** The product shall provide network metrics for data performance for HyperText Transfer Protocol (HTTP) applications to include latency and packet loss IAW the standards for latency and packet loss referenced in this section.

5. **[Required: PMT]** The product shall have the capability to report substandard IP-voice and IP-video performance via SNMP Version 3 (SNMPv3) traps on a probe-to-probe basis based on a configurable threshold.

6. **[Required: PMT]** The product shall integrate with the existing DISN Operational Support System (OSS).

7. **[Required: PMT]** The product shall comply with all applicable STIGs and checklists.

8. **[Required: PMT]** The product shall use a network probe to measure E2E performance.

9. **[Required: PMT]** The network probe shall support a minimum of two 10/100/1000-Mbps Ethernet Network Interface Cards (NICs) one for Operations, Administration, and Maintenance (OA&M) and the other for test traffic.

10. **[Required: PMT]** The product components (i.e., probe, database, performance measurement application, and data server) shall support remote and local configuration.

11. **[Required: PMT]** The product components (i.e., probe, database, performance measurement application, and data server) shall preserve data integrity in the event of power loss.

12. **[Required: PMT]** The network probe shall have the capability to push or pull data to a data collection server via SNMPv3 The product shall have the capability to generate documents via this method to help anticipate, isolate, mitigate and describe problems.

13. **[Required: PMT]** The network probe shall generate voice over IP (G.711 – 20 ms) test sessions.

14. **[Required: PMT]** The network probe shall generate Video over IP (H.263 384 kbps, 30 frames per second fps) test sessions.

15. **[Required: PMT]** The network probe shall generate HTTP and TCP test sessions.

16. **[Required: PMT]** The network probes shall be capable of marking active test streams with user-configurable DSCP values as specified in Table 5.3.3-1, *DSCP Assignments*.

17. **[Required: PMT]** The network probes shall be capable of operating in active and passive modes.

18. **[Reserved]**

19. **[Required: PMT]** The product data server shall be capable of pulling probe data at user-defined intervals, or accepting data pushed by probes via SNMPv3. The interval shall be configurable from 1 to 10 minutes.

20. **[Required: PMT]** The product database shall be designed to retain one year's worth of performance data based on a vendor-calculated typical implementation.

21. **[Required: PMT]** The product database shall be able to export the performance data.

22. **[Required: PMT]** If the product has a system performance measurement application, it shall be equipped with a minimum of a single Ethernet 10/100/1000-Mbps interface.

23. **[Required: PMT]** The product shall have a graphical user interface (GUI) that is capable of displaying media performance measurements for assigned probes on user-defined intervals. The default shall be a 5-minute interval.

24. **[Required: PMT]** The product shall have the ability to graphically display substandard media performance received from the probes.

25. **[Required: PMT]** The product shall be capable of exporting media performance measurements to higher level OSSs.

26. **[Required: PMT]** The product shall be capable of triggering Substandard Performance Fault Isolation (SPFI) activity when substandard performance is detected.

NOTE: The SPFI activity includes automated scripts that will isolate the cause of the substandard performance to one or more specific network segments as described in the following requirement.

27. **[Required: PMT]** The product shall be capable of isolating the cause(s) of substandard performance to a specific location or site.

THIS PAGE INTENTIONALLY LEFT BLANK